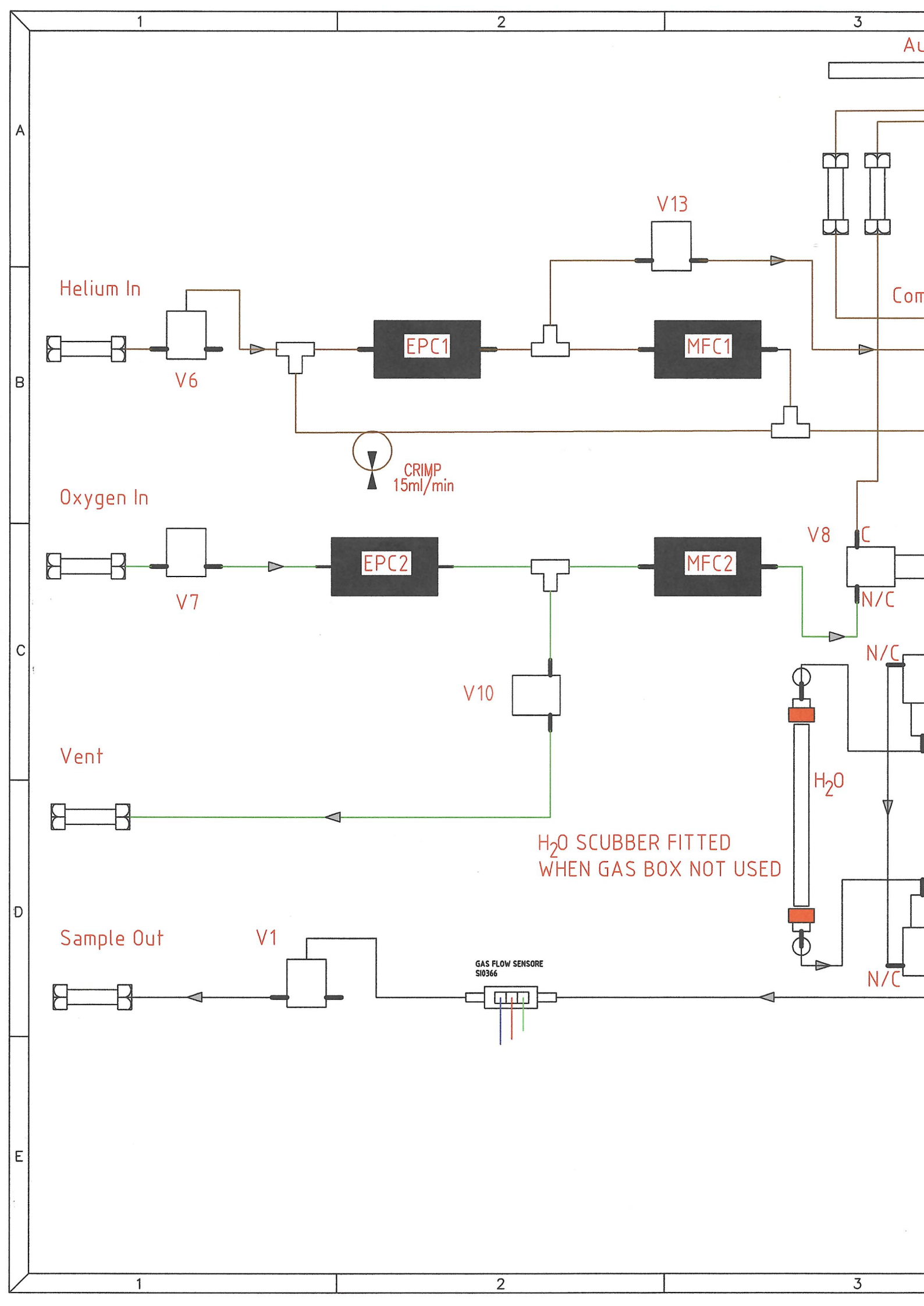
Helium In
V6
EPC1
MFC1
V13
CRIMP
15ml/min
Oxygen In
V7
EPC2
MFC2
V8
C
N/C
N/C
V10
Vent
H2O
H2O SCUBBER FITTED
WHEN GAS BOX NOT USED
Sample Out
V1
GAS FLOW SENSORE
SI0366
N/C

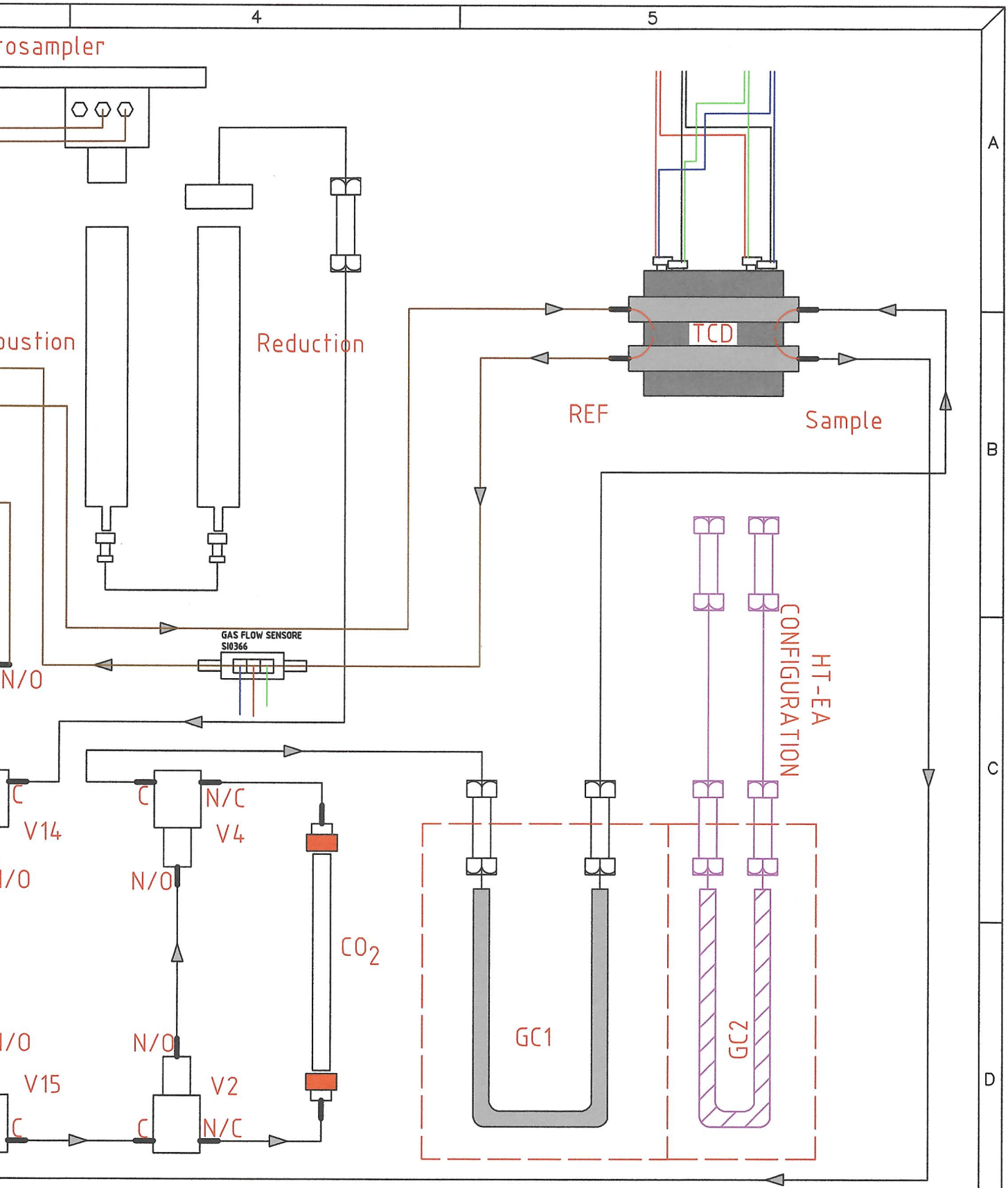

DW	ISSUED FOR MANUFACTURE	05/12/19	C
ISSUED BY	DESCRIPTION	DATE	REV. No.

REMOVE ALL BURRS & SHARP EDGES	DO NOT SCALE	THIRD ANGLE
MATL.	ALL DIMENSIONS IN MILLIMETERS	
FINISH	TOLERANCES UNLESS OTHERWISE STATED ±0.15° ANGULAR 0. ±0.5 SURFACE FINISH 1.6u 0.0 ±0.1 0.00 ±0.05	DRG SIZE A3 SHEET
DRN		SCALE DRN
TITLE ISO EARTH PLUMBING		DRG No 10202/004/033
STRICTLY CONFIDENTIAL COPYRIGHT SERCON LTD		

IN 1241
INITIAL: PH
DATE: 8/10/20

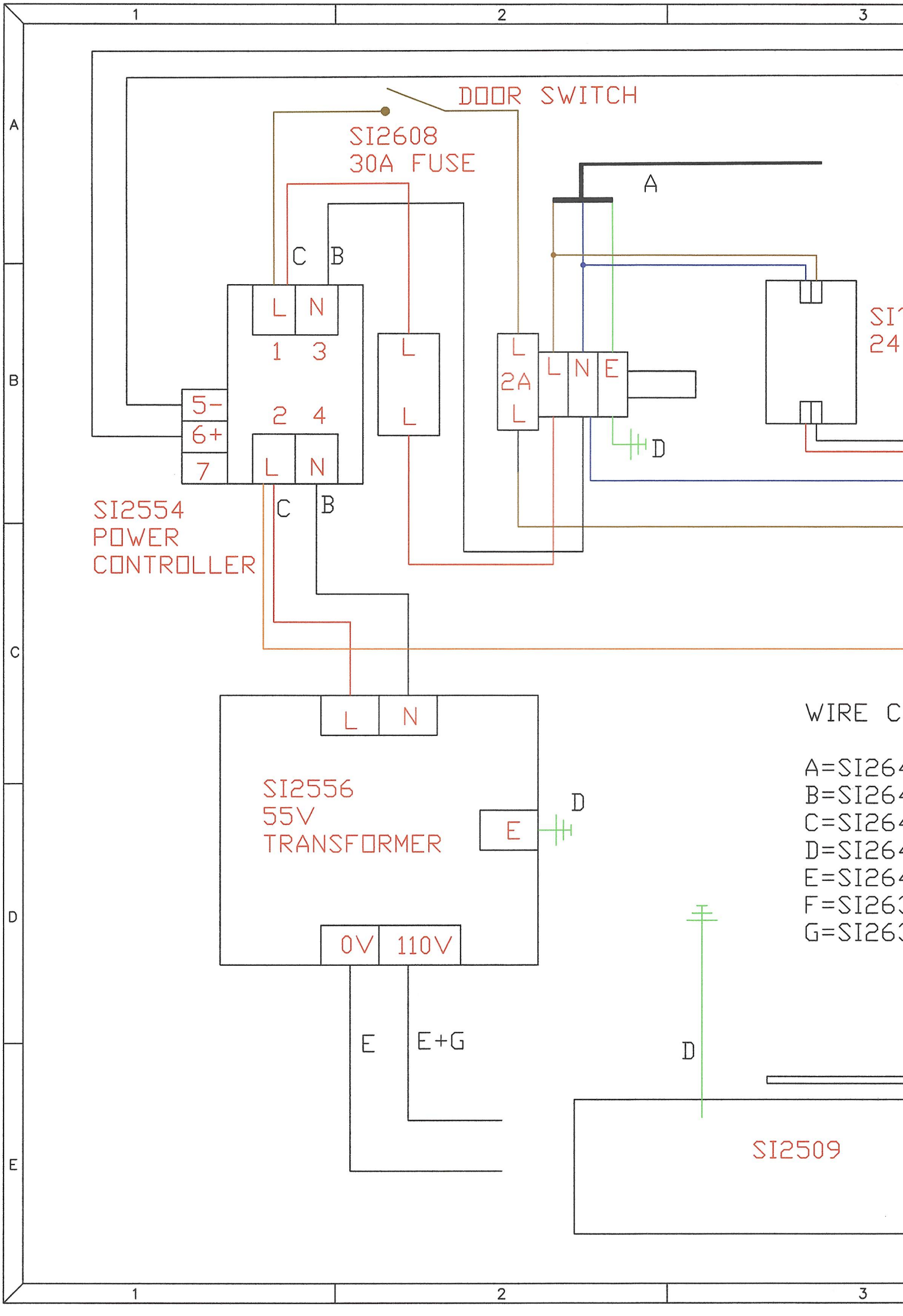
DOOR SWITCH
SI2608
30A FUSE
A
C
B
L
N
1
3
2
4
5-
6+
7
L
L
L
2A
L
L
N
E
D
SI
24
SI2554
POWER
CONTROLLER
C
B
L
N
SI2556
55V
TRANSFORMER
E
D
0V
110V
E
E+G
D
SI2509
WIRE C
A=SI264
B=SI264
C=SI264
D=SI264
E=SI264
F=SI263
G=SI263

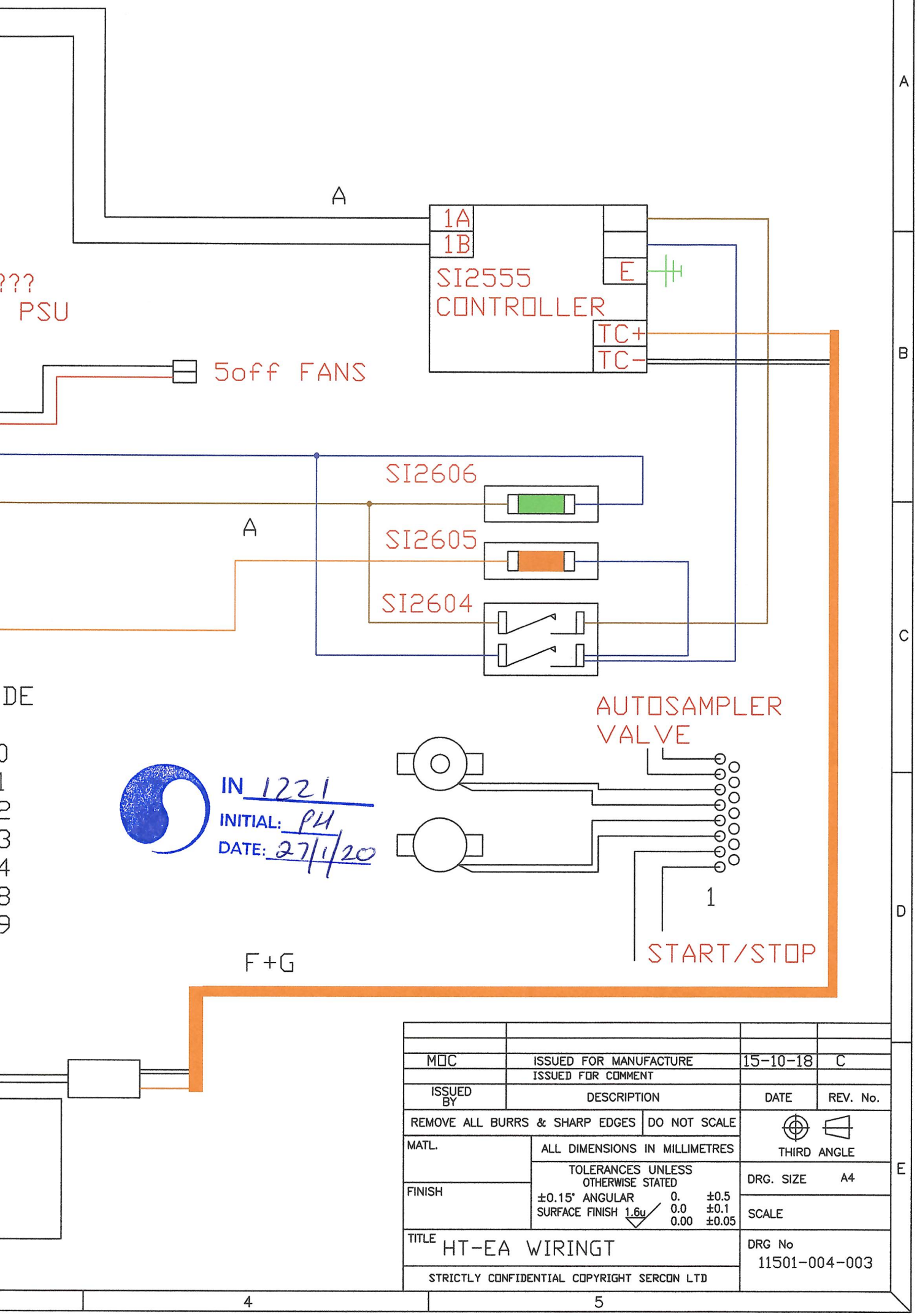

MOC	ISSUED FOR MANUFACTURE	15-10-18	C
	ISSUED FOR COMMENT		
ISSUED BY	DESCRIPTION	DATE	REV. No.

REMOVE ALL BURRS & SHARP EDGES | DO NOT SCALE

THIRD ANGLE

MATL.

ALL DIMENSIONS IN MILLIMETRES

FINISH

TOLERANCES UNLESS OTHERWISE STATED
±0.15° ANGULAR 0. ±0.5
SURFACE FINISH 1.6u 0.0 ±0.1
0.00 ±0.05

DRG. SIZE A4

SCALE

TITLE HT-EA WIRINGT

DRG No 11501-004-003

STRICTLY CONFIDENTIAL COPYRIGHT SERCON LTD

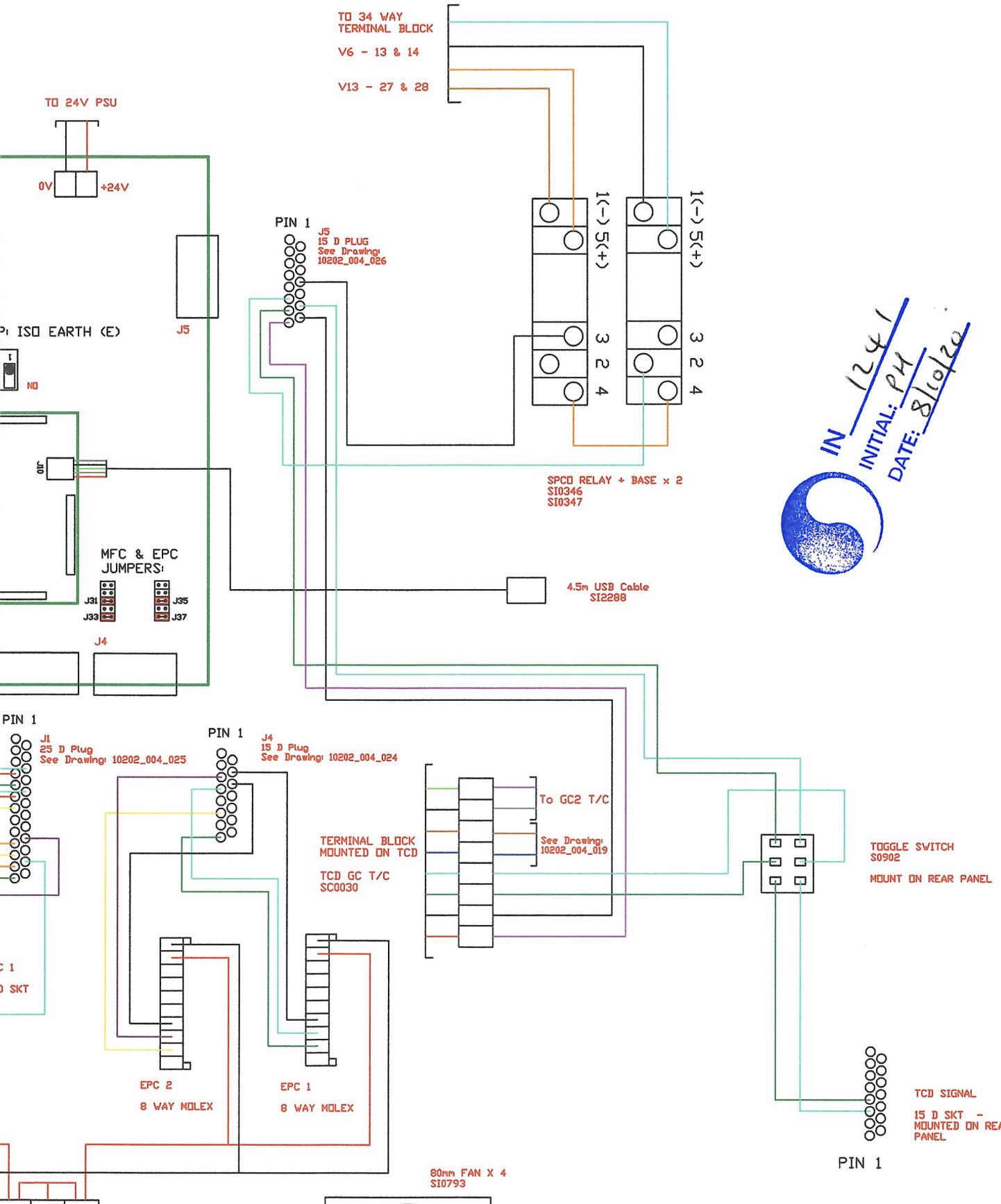

	DW	TCD RELOCATED	05-08-2020	C2
	DW	APPROVED	05-12-2019	C1
MOD	ISSUED BY	DESCRIPTION	DATE	REV. No.

REMOVE ALL BURRS & SHARP EDGES	DO NOT SCALE	THIRD ANGLE
MATL.	ALL DIMENSIONS IN MILLIMETRES	
FINISH	TOLERANCES UNLESS OTHERWISE STATED ±0.15° ANGULAR 0. ±1 SURFACE FINISH 1.6u 0.00 ±0.1 0.0 ±0.2	DRG. SIZE A1 SCALE
TITLE: ISO EARTH WIRING – PREP		DRG No: 10202-004-020
SERCON LTD		

©

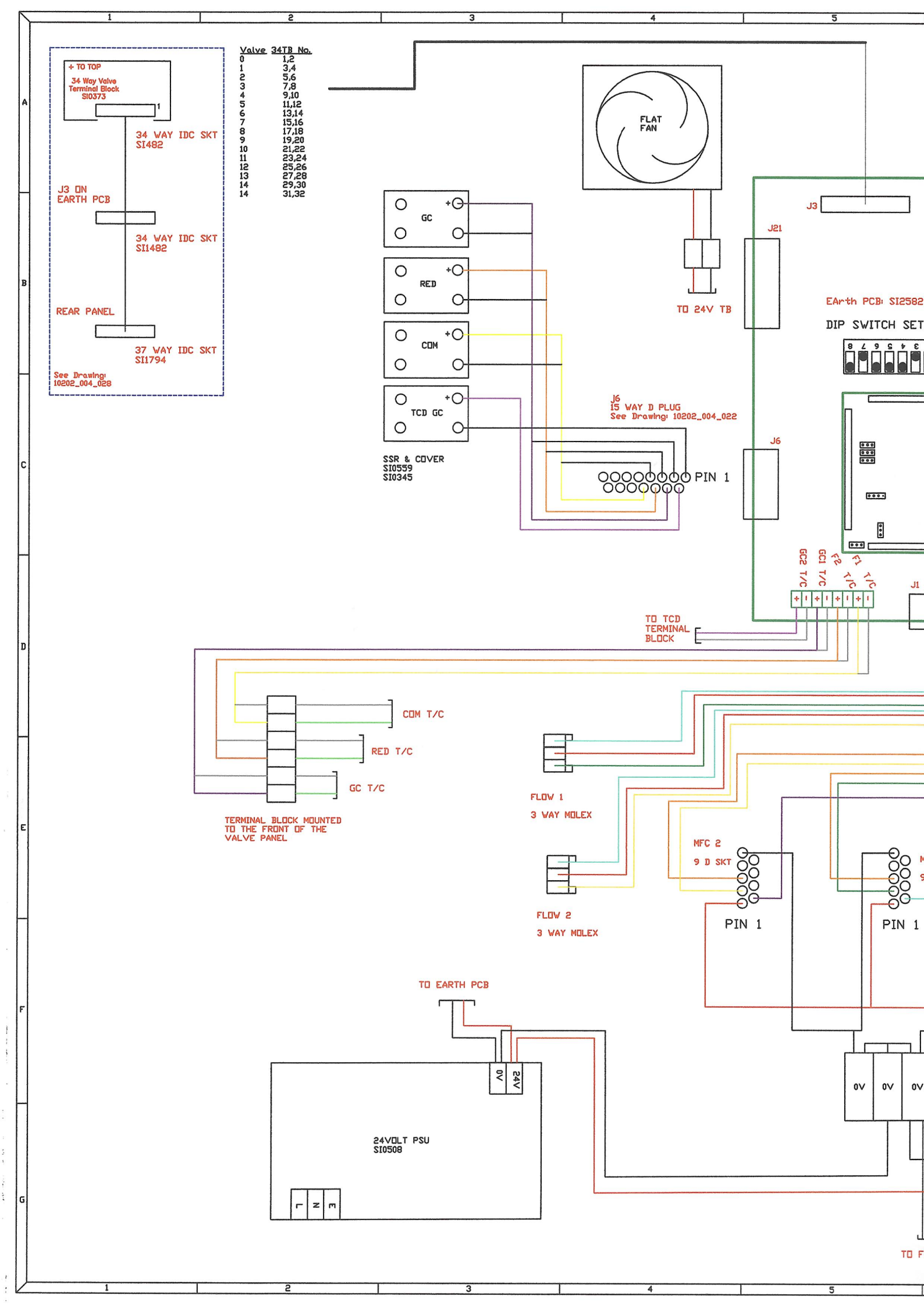
+ TO TOP
34 Way Valve Terminal Block SI0373
1
34 WAY IDC SKT SI1482
J3 ON EARTH PCB
34 WAY IDC SKT SI1482
REAR PANEL
37 WAY IDC SKT SI1794
See Drawing: 10202_004_028
Valve 34TB No.
0 1,2
1 3,4
2 5,6
3 7,8
4 9,10
5 11,12
6 13,14
7 15,16
8 17,18
9 19,20
10 21,22
11 23,24
12 25,26
13 27,28
14 29,30
14 31,32
FLAT FAN
TO 24V TB
GC
RED
COM
TCD GC
SSR & COVER SI0559 SI0345
J6 15 WAY D PLUG See Drawing: 10202_004_022
PIN 1
J3
J21
J6
EArth PCB: SI2582
DIP SWITCH SET
GC2 T/C
GC1 T/C
F2 T/C
F1 T/C
J1
TO TCD TERMINAL BLOCK
COM T/C
RED T/C
GC T/C
TERMINAL BLOCK MOUNTED TO THE FRONT OF THE VALVE PANEL
FLOW 1
3 WAY MOLEX
FLOW 2
3 WAY MOLEX
MFC 2
9 D SKT
PIN 1
PIN 1
TO EARTH PCB
0V
24V
24VOLT PSU SI0508
L
N
E
0V
0V
0V
TO F

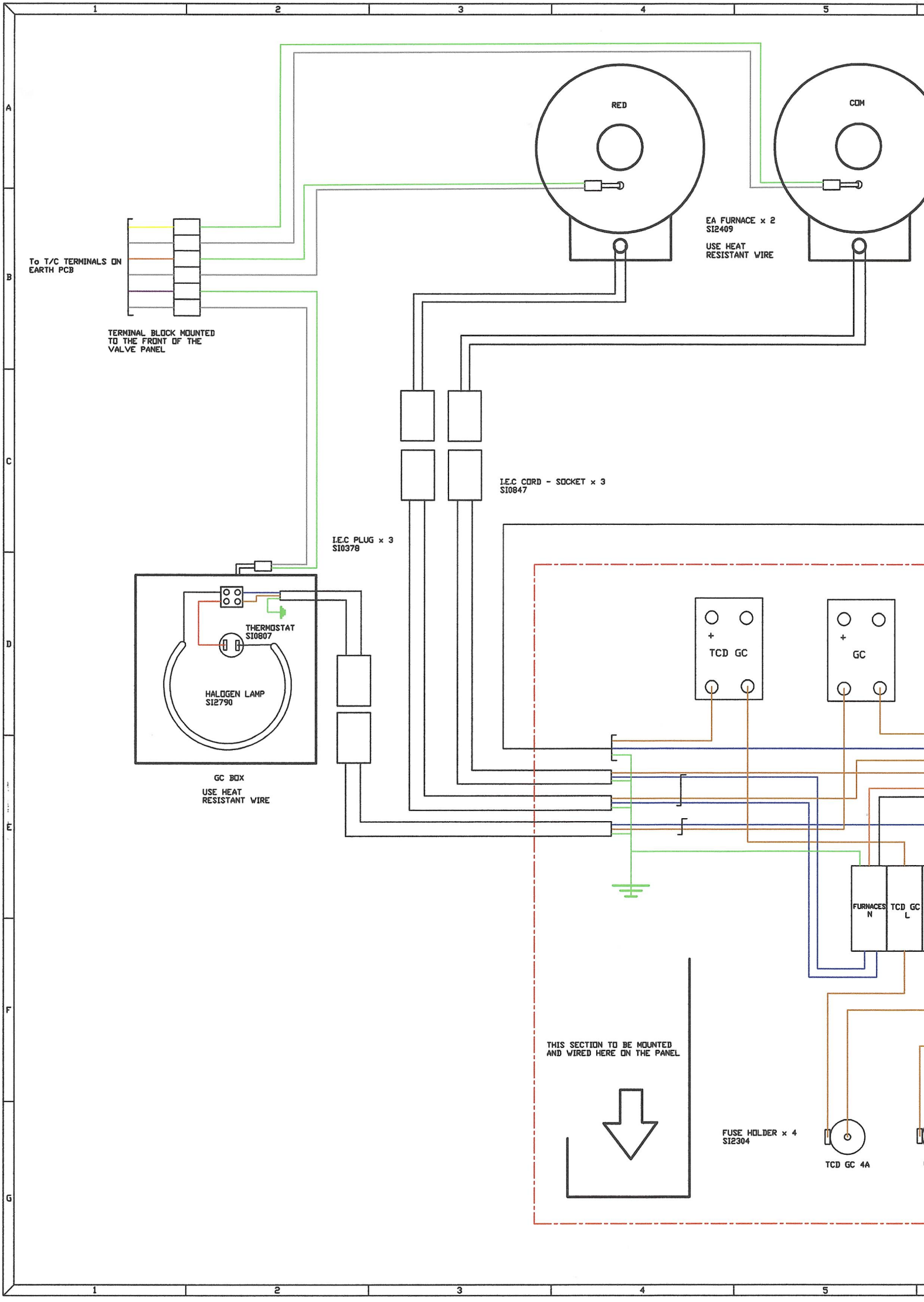
RED
COM
EA FURNACE x 2
SI2409
USE HEAT
RESISTANT WIRE
To T/C TERMINALS ON
EARTH PCB
TERMINAL BLOCK MOUNTED
TO THE FRONT OF THE
VALVE PANEL
I.E.C CORD - SOCKET x 3
SI0847
I.E.C PLUG x 3
SI0378
THERMOSTAT
SI0807
HALOGEN LAMP
SI2790
GC BOX
USE HEAT
RESISTANT WIRE
TCD GC
GC
FURNACES
N
TCD GC
L
THIS SECTION TO BE MOUNTED
AND WIRED HERE ON THE PANEL
FUSE HOLDER x 4
SI2304
TCD GC 4A

IN 1241
INITIAL: PH
DATE: 8/10/20

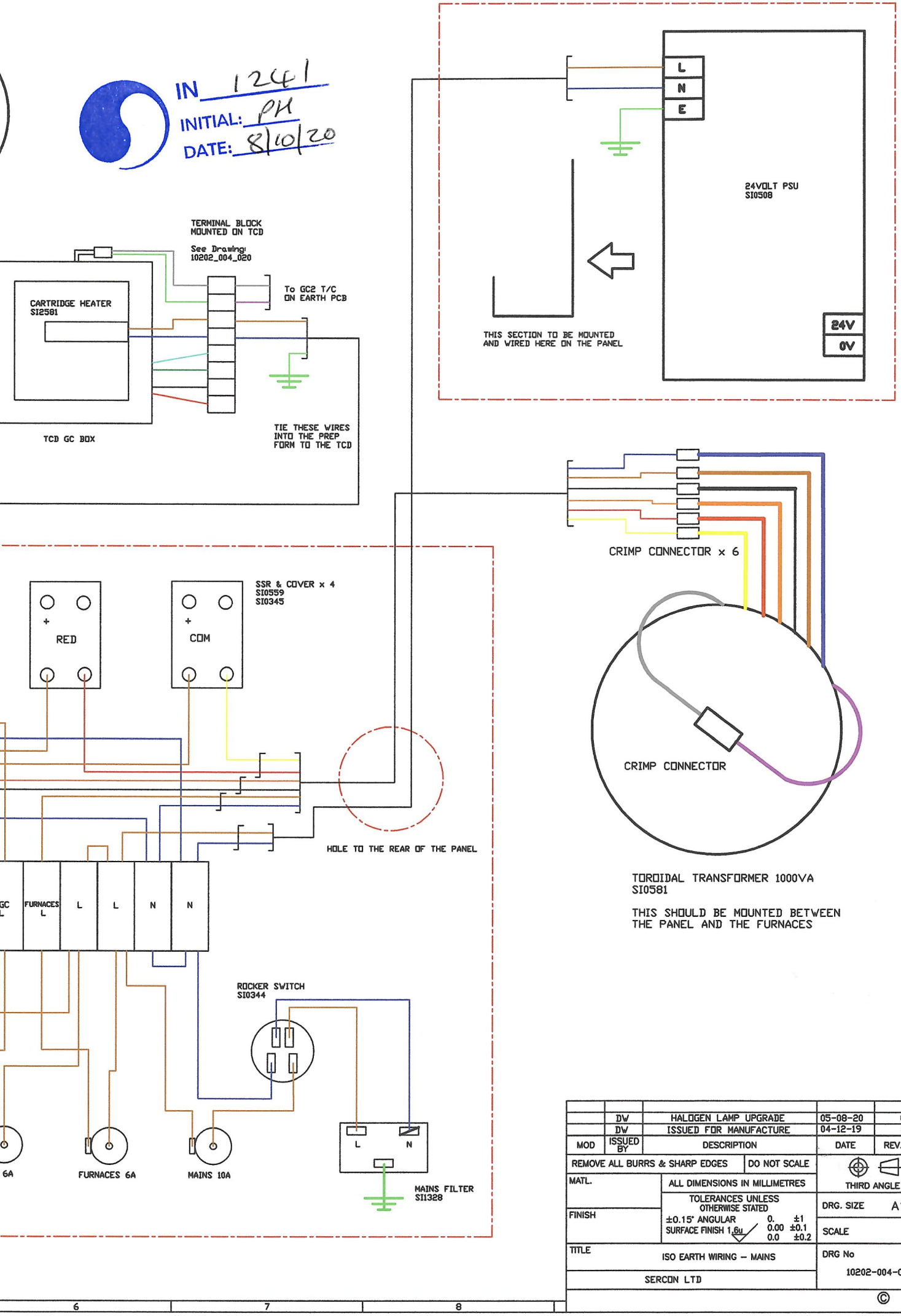

MOD	ISSUED BY	DESCRIPTION	DATE	REV. No.
	DW	HALOGEN LAMP UPGRADE	05-08-20	C2
	DW	ISSUED FOR MANUFACTURE	04-12-19	C1

REMOVE ALL BURRS & SHARP EDGES	DO NOT SCALE	THIRD ANGLE
MATL.	ALL DIMENSIONS IN MILLIMETRES	
FINISH	TOLERANCES UNLESS OTHERWISE STATED ±0.15° ANGULAR 0. ±1 SURFACE FINISH 1.6u 0.00 ±0.1 0.0 ±0.2	DRG. SIZE A1
		SCALE
TITLE: ISO EARTH WIRING – MAINS		DRG No 10202-004-019
SERCON LTD		

©